G3 Evo MRI

Non-ferrous circular downlight for use in MRI rooms



The G3 Evo MRI is the latest generation of Thorlux's non-ferrous recessed downlighters, specifically engineered for use in magnetic resonance imaging (MRI) rooms.

Designed to meet the stringent requirements of MRI facilities, the G3 Evo MRI combines a non-ferrous downlighter head with a remote gearbox, helping to ensure reliable performance while maintaining compatibility with sensitive MRI equipment. A non-maintained emergency lighting option is also available to support safety and compliance requirements.

Applications: MRI rooms.

- Non-ferrous construction, designed for use in MRI rooms
- Two output circuits per DALI gearbox where each circuit can power a minimum of 3 downlighter heads, up to a maximum of 7
- Designed for low EMI when used with correct EMI filters (supplied by others)
- Emergency status indicator LED can be remotely mounted outside of the room
- DALI dimmable control gear as standard. Can be used with push to make retractive switch for dimming and switching

IP20 | SMARTSCAN | LUXGUARD

Specification

IP rating	**IP20**

Lighting

Lumen output	**1,360 lm**

Emergency data

Emergency lumen output	**1,060 lm**	Emergency type	**Non-maintained**
Emergency duration	**3 hours**	Battery specification	**Lithium Iron Phosphate (LiFePO4)**

Power

LED power	**9 W**	Circuit power	**12 W**

G3 Evo MRI

Construction

Housing	**Non-ferrous construction with high pressure die-cast aluminium ring**	Finish	**Full polyester powder coat**
Optical assembly	**Injection moulded reflector**	Reflector colour	**White reflector**

LED characteristics

CRI	**80+**	Colour temperature	**4000 K**
Rated life (hours)	**100 K - L90/B10**	LED protection	**LUX Guard**
Driver efficiency	**>85%**	Replaceable light source	**Yes**
Power factor	**>0.95**	MacAdam ellipse	**3 Step**
Flicker metric	**IEC TR 61547-1: PstLM ≤1.0 / SVM ≤0.4**		

Compliance

UKCA	**Yes**	CE	**Yes**
Energy efficiency class	**This product contains a light source of energy efficiency class A**		

Dimensions

Downlighter head

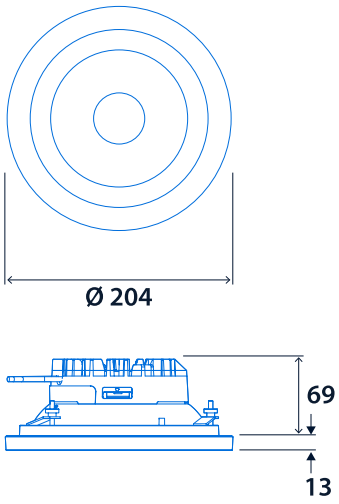

Emergency gearbox

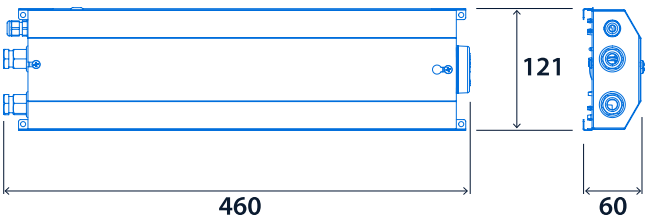

DALI gearbox

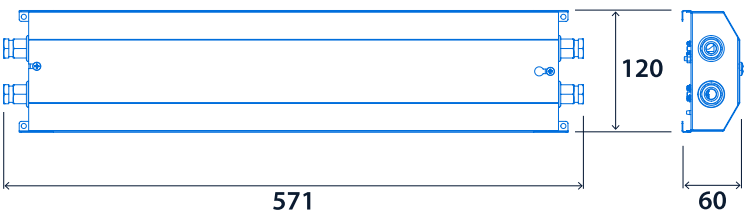

Cut-out - Ø 180
Minimum void depth - 110

Range

Product version	LED power	Emergency system (optional)	CAT. No.	Lighting control system
Downlighter head	9 W	-	**GT21502**	-
DALI gearbox	-	-	**GT21503**	**AF**
Emergency kit (Non-maintained downlighter and gearbox)	6 W	**W / E**	**GT21504ZF**	-

Emergency system - prefix catalogue number with **W** SmartScan Emergency / **E** Standard Emergency
Lighting control system - suffix catalogue number with **AF** Dimming (DALI)

E.g. **GT21503AF** = DALI gearbox / Dimming (DALI)



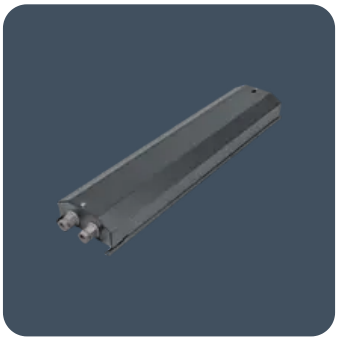

Click or scan here

View G3 Evo MRI variants using our online filtering tool



Information is correct as of 25-Nov-2026, however must not be interpreted as a guarantee of individual product performance and/or characteristics. We reserve the right to alter specifications and designs without prior notice.