Epsilon

LED recessed 600 x 600 luminaires for cleanroom and sterile environments



An ultra-efficient lighting solution for cleanroom areas with efficiency of as much as 161.5 LL/CW, the Epsilon offers exceptional energy and cost savings over its lifetime.

This 600 x 600 luminaire is available as standard with a satin polycarbonate diffuser or with a clear cover option using polycarbonate lenses, which offer low glare. It is rated IP65 below the ceiling and IP54 above, ensuring ceiling integrity is maintained at all times. Epsilon is compliant with FS209E class 1000 and ISO14644-1 class 6.

Applications: clean and sterile environments, hospitals, pharmacies, laboratories, and food preparation areas.

- Oustanding efficiencies of up to 161.5 LL/CW
- Clear cover with low glare lenses and satin diffuser options available
- Conforms to FS209E class 1000 and ISO14644 class 6 standard
- Designed for modular "T" and cut aperture ceilings
- IP65 below ceiling, IP54 above ensures ceiling integrity is maintained at all times
- SmartScan wireless technology removes the need for control cabling. Ideal for retro-fit

Notes: Only available in 600 x 600 mm sizes

IP65 (IP54 above ceiling) **IK08** **Up to 161.5 LL/CW** SMARTSCAN LUXGUARD

Specification

Mounting	**Recessed**	IP rating	**IP65 (IP54 above ceiling)**
Impact rating	**IK08**	Nominal size	**600 x 600 mm**
Max presence detection height	**8 m**		

Lighting

Optic	**Clear cover and low glare lens** **Satin diffuser**	Lumen output	**5,070 lm - 9,990 lm**
Efficacy	**Up to 161.5 LL/CW**		

Epsilon

Emergency data

Emergency lumen output	**575 lm - 715 lm**	Emergency type	**Maintained**
Emergency duration	**3 hours**	Battery specification	**Lithium Iron Phosphate (LiFePO4)**

Power

LED power	**29 W - 60 W**	Circuit power	**32 W - 65 W**

Construction

Housing	**Steel body with aluminium frame**	Finish	**Full polyester powder coat**
Body colour	**White (RAL 9016)**	Optical assembly	**Clear polycarbonate cover** **Satin polycarbonate cover**
Gasket	**White EPDM closed cell gasket**		

LED characteristics

CRI	**80+**	Colour temperature	**4000 K**
Rated life (hours)	**100 K - L80/B10**	LED protection	**LUX Guard**
Driver efficiency	**>91%**	Replaceable light source	**Yes**
Power factor	**>0.9**	MacAdam ellipse	**3 Step**
Flicker metric	**IEC TR 61547-1: PstLM ≤1.0 / SVM ≤0.4**		

Compliance

UKCA	**Yes**	CE	**Yes**
Energy efficiency class	**This product contains a light source of energy efficiency class A**	Thermoplastic rating	**TP(a)**
Cleanroom classifications	**FS209E class 1000** **ISO 14644-1 class 6**		

Dimensions

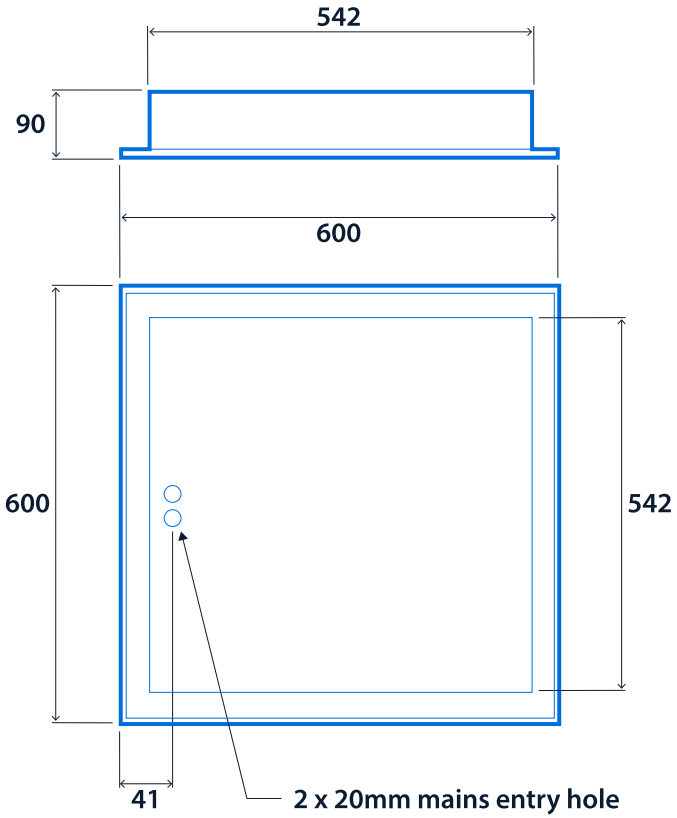

Epsilon

Range

Emergency system (optional)	Product	LED power	Cover	Lighting control system
W SmartScan Emergency	**EP** Epsilon	**030** 30 W	**S** Satin diffuser	**S** SmartScan Internal
T AutoTest*		**049** 49 W		**A** Dimming (DALI)
E Standard Emergency*		**059** 59 W		**L** Non-dimming
		029 29 W	**C** Clear cover	
		047 47 W		
		060 60 W		

* **Only** available with **A** / **L** control type

E.g. **WEP030SS** = SmartScan Emergency / Epsilon / 30 W / Satin diffuser / SmartScan Internal



Satin diffuser



Clear cover and low glare lens

Click or scan here

View Epsilon variants using our online filtering tool



Information is correct as of 25-Nov-2026, however must not be interpreted as a guarantee of individual product performance and/or characteristics. We reserve the right to alter specifications and designs without prior notice.