Cleanline

Cleanroom LED recessed luminaires

The energy-efficient Cleanline is an IP65-rated, recessed, modular luminaire with a quick-release extruded aluminium cover frame and a choice of two front covers.

This UK-made, purpose-designed luminaire satisfies the requirements of cleanroom classifications FS209D 10,000 and 100,000 and ISO BSEN 14644-1, 7 and 8.

Applications: printing works, water treatment plants and pump rooms, industrial process areas, shower rooms and toilet blocks, food preparation areas.

- Quick release extruded aluminium cover frame
- Cover seals to ceiling with FDA approved silicone gasket
- Optional tamper-resistant cover screws
- Fits most suspended ceiling types or cut apertures
- SmartScan wireless technology removes the need for control cabling. Ideal for retro-fit



IP65 (IP20 above ceiling) | IK10 | Up to 116.3 LL/CW | SMARTSCAN | LUXGUARD

Specification

Mounting	**Recessed**	IP rating	**IP65 (IP20 above ceiling)**
Impact rating	**IK10**	Max presence detection height	**8 m**

Lighting

Optic	**Low glare diffuser** **Opal diffuser**	Lumen output	**2,250 lm - 4,805 lm**
Efficacy	**Up to 116.3 LL/CW**		

Emergency data

Emergency lumen output	**215 lm - 300 lm**	Emergency type	**Maintained**
Emergency duration	**3 hours**	Battery specification	**Nickel Metal Hydride (NiMH)**

Power

LED power	**26 W - 38 W**	Circuit power	**30 W - 43 W**

Construction

Housing	**Zinc coated steel body**	Finish	**Full polyester powder coat**
Body colour	**White**	Optical assembly	**Polycarbonate TP(a) fire-retardant diffuser**
Gasket	**FDA approved silicone gasket**	Cover fixings	**Zinc-plated steel fast lead anti-tamper toolhead** **Zinc-plated steel fast lead slotted**

LED characteristics

CRI	**80+** **90+**	Colour temperature	**4000 K**
Rated life (hours)	**100 K - L80/B10**	LED protection	**LUX Guard**
Driver efficiency	**>85%**	Replaceable light source	**Yes**
Power factor	**>0.95**	MacAdam ellipse	**3 Step**
Flicker metric	**IEC TR 61547-1: PstLM ≤1.0 / SVM ≤0.4**		

Compliance

UKCA	**Yes**	CE	**Yes**
Energy efficiency class	**This product contains a light source of energy efficiency class B**	Thermoplastic rating	**TP(a)**
Cleanroom classifications	**FS209D class 10,000 and 100,000** **ISO 14644-1 class 7 and 8**		

Dimensions

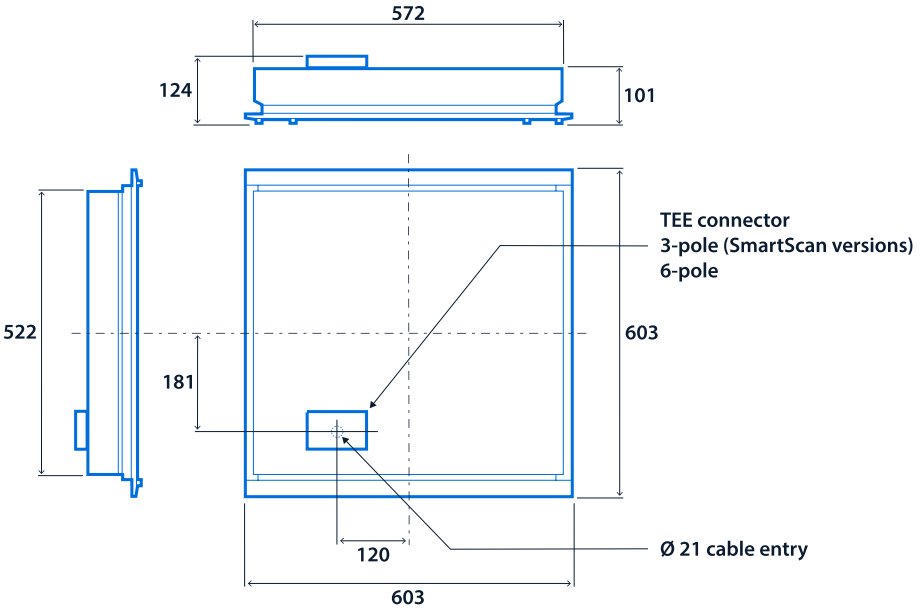
572
124
101
522
181
603
TEE connector
3-pole (SmartScan versions)
6-pole
120
603
Ø 21 cable entry

Range

	Nominal size	CRI	LED power	Emergency system (optional)	Low glare	Opal	Lighting control system
SmartScan	600 x 600	80+	26 W	W	CZ17998	CZ17000	SS
			38 W	W	CZ17999	CZ17001	SS
		90+	26 W	W	CZ19026	CZ19028	SS
			38 W	W	CZ19027	CZ19029	SS
Standard	600 x 600	80+	26 W	T / E	CZ18000	CZ17002	A / L
			38 W	T / E	CZ18001	CZ17003	A / L
		90+	26 W	T / E	CZ19032	CZ19034	A / L
			38 W	T / E	CZ19033	CZ19035	A / L

Emergency system - prefix catalogue number with **W** SmartScan Emergency / **T** AutoTest Emergency / **E** Standard Emergency
Lighting control system - suffix catalogue number with **SS** SmartScan Internal / **A** Dimming (DALI) / **L** Non-dimming
Tamper-resistant screws - suffix catalogue number with **T**

E.g. **CZ17998SST** = 600 x 600 / CRI 80+ version / 26 W / SmartScan Emergency / Low glare / SmartScan Internal / Tamper-resistant screws

Accessories

Product code	Description	Weight
CZ11467	Cleanline bezel frame - For spring tee ceilings	-
KEY12152	Tamper-resistant key	-



Click or scan here

View Cleanline variants using our online filtering tool



Information is correct as of 25-Nov-2026, however must not be interpreted as a guarantee of individual product performance and/or characteristics. We reserve the right to alter specifications and designs without prior notice.