# Clara 180

## Wall-mounted LED up and downlighters



Designed to fuse aesthetic form and functional design, Clara 180 is a stylish architectural luminaire for interior applications.

Clara 180 uses medium-power LEDs mounted on specially designed circuit boards, providing excellent thermal management and LED failure protection. A super-efficient reflector directs light out of the luminaire, achieving an impressive 134.6 lumens per circuit watt.

Please also see the Clara 90 and Clara 360 luminaires.

Applications: corridors, stairwells, reception areas, meeting rooms, and pillars in open-plan offices.

- Can be mounted horizontally or vertically
- Up and downlighter or uplighter only version
- SmartScan wireless technology removes the need for control cabling. Ideal for retro-fit

Notes: Uplighter only version can also be used as a downlighter

IP40 | Up to 134.6 LL/CW | SMARTSCAN | LUXGUARD

## Specification

| | | | |
|---|---|---|---|
| Mounting | **Surface** | IP rating | **IP40** |
| Max presence detection height | **8 m** | | |

## Lighting

| | | | |
|---|---|---|---|
| Optic | **Satin cover** | Lumen output | **1,560 lm - 3,095 lm** |
| Efficacy | **Up to 134.6 LL/CW** | | |

## Emergency data

| | | | |
|---|---|---|---|
| Emergency lumen output | **190 lm - 380 lm** | Emergency type | **Maintained** |
| Emergency duration | **3 hours** | Battery specification | **Nickel Metal Hydride (NiMH)** |

## Power

| | | | |
|---|---|---|---|
| LED power | **10 W - 20 W** | Circuit power | **13 W - 23 W** |

# Clara 180

## Construction

| | | | |
|---|---|---|---|
| Housing | **Injection moulded fire-retardant polycarbonate body** | Body colour | **Silver (RAL 9006)<br>White (RAL 9016)** |
| Optical assembly | **High efficiency polycarbonate covers** | | |

## LED characteristics

| | | | |
|---|---|---|---|
| CRI | **80+** | Colour temperature | **4000 K** |
| Rated life (hours) | **100 K - L90/B10** | LED protection | **LUX Guard** |
| Driver efficiency | **>80%** | Replaceable light source | **Yes** |
| Power factor | **>0.95** | MacAdam ellipse | **3 Step** |
| Flicker metric | **IEC TR 61547-1: PstLM ≤1.0 / SVM ≤0.4** | | |

## Compliance

| | | | |
|---|---|---|---|
| UKCA | **Yes** | CE | **Yes** |
| Energy efficiency class | **This product contains a light source of energy efficiency class B** | | |

# Dimensions

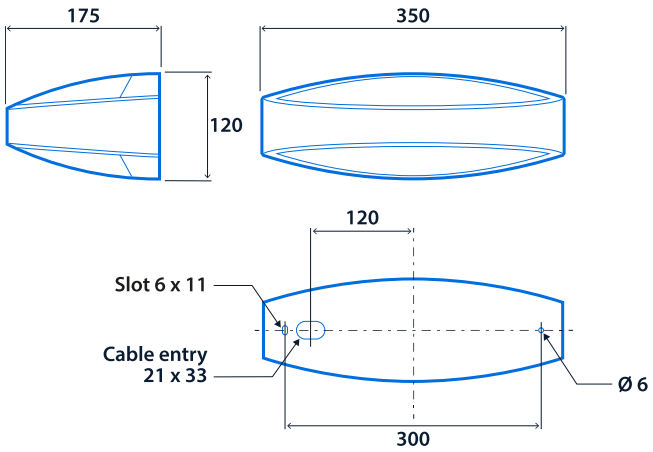

# Clara 180

## Range

| | Product version | LED power | Emergency system (optional) | CAT. No. | Lighting control system |
|---|---|---|---|---|---|
| SmartScan | Up and downlighter | 20 W | **W** | **CA19183** | **SS** |
| | Uplighter | 10 W | **W** | **CA19182** | **SS** |
| Standard | Up and downlighter | 20 W | **T / E** | **CA15854** | **A / L** |
| | Uplighter* | 10 W | **T / E** | **CA15853** | **A / L** |

* Can also be used as a downlighter

**Emergency system** - prefix catalogue number with **W** SmartScan Emergency / **T** AutoTest Emergency / **E** Standard Emergency
**Lighting control system** - suffix catalogue number with **SS** SmartScan Internal / **A** Dimming (DALI) / **L** Non-dimming
**Silver version** - suffix catalogue number with **SV3**

E.g. **WCA19183SSSV3** = Up and downlighter / 20 W / SmartScan Emergency / SmartScan Internal / Silver version



## Click or scan here

**View Clara 180 variants using our online filtering tool**



Information is correct as of 25 Nov 2026, however must not be interpreted as a guarantee of individual product performance and/or characteristics. We reserve the right to alter specifications and designs without prior notice.